UNIT-3
PROCESSOR AND BIOS

3.2 Describe Co-Processor

Co-Processor Concept:

❖ Definition:

- A co-processor is a processor that works side by side with the CPU of a computer.
- Additionally this processor is referred to as a supplementary processor.
- Using the processor you can perform some difficult mathematical calculations such as graphics, signal processing, string processing, floating point arithmetic and input-output interfaces

❖ Co-Processor Architecture:

A co-processor architecture like 8087 is shoen below.

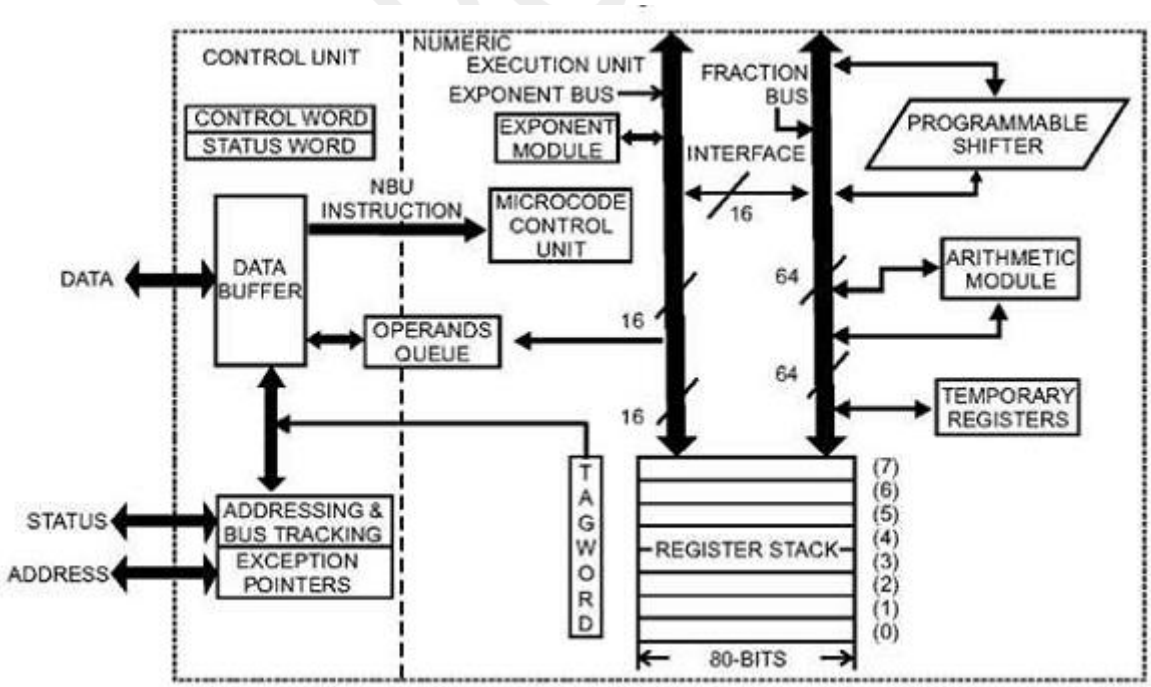

- Co-processor generally work parallal to microprocessor.
- Intel developed thid coprocessor for use with 16-bit 8086 family microprocessor.
- Whenever the processor is used in conjuction with microprocessor, the calculations are carried out by processo, allowing the CPU to use its resources in other ways.
- The figure shows 8087 coprocessor's architecture. There are two main units in this architecture :

  The Control Unit and

  The numeric execution Unit
- Control unit includes Data buffers, control and status word registers, shared open queues, exception pointers, and addressing and bus tracking units.
- It consist mainly a microcode control unit, a register stack, a programmable shifter, temporary register an arithmetic module, an exponent module, and a shared open queue.
- Coprocessor control unit control instruction execution(IE), which is handled by numeric execution unit.
- The microcode control unit(CU) of the numeric execution unit obtains numeric instruction from the coprocessor control unit.
- The coprocessor has eight register of 80 bits each, which are used in the LIFO stack.
- Register stack contain an operands that the coprocessor instructions will execute over.
- Stack register are accessed through the 3 bit SP(Stack pointer) which holds binary values from 000 to 111 in order to show the 8 stack register.
- A circular stack is used in LIFO mode.In this case the binary value "000" can be used to initialize the pointer after the reset action has been performed.
- There are three types of numeric data on which the coprocessor operates: Packed decimal numbers, real numbers and binary integers.
- A binary integer can either be 16-bit word integer , a 32-bit short integer or a 64-bit long integer.
- Real numbers are divided into three types: 32-bit short real, 64-bit long real, and 80-bit temporary real, BCD formets represent packed decimal number in 80 bits.
- A 16-bit exponent bus or a 64 bit mantissa bus is used for transferring numeric data in the coprocessor.
- A 16-bit control word and a 16-bit status word are included in coprocessor.
- In order to write a control word into the control register, a coprocessor first writes the control word within the memory location. The coprocessor than reads the control word from memory and stores it in the control register.
- Similarly, the status word reads the data in status register and sends it to memory.

- This coprocessor also reads the status register from that location in memory. By this the processor and microprocessor communicate with each other through the main memory.

Working of co-processor:

- This coprocessor is mainly designed to work with 8086 and 8088 processors.
- The coprocessor offloads specific CPU tasks so the system can run more efficiently.
- When this processor is used in conjunction with the microprocessor, the instruction from both processor and microprocessor are integrated into program.
- Assembly language instruction begin with and "F" which represents coprocessor instructions, while instruction without and "F" prefix show microprocessor instructions.
- In the first step microprocessor fetches the instruction from memory, and sequentially load them in the queue, while the 8087 coprocessor also reads and stores the instructions.
- In other word every instruction can be read by both coprocessor and processor, but at execution time both can execute their particular instructions.
- In other words the instruction has been read and decoded.
- If a microprocessor checks if there is an instruction from a coprocessor, that instruction is treated as a No-operation.
- Co-processor will also be treated as no-operators if they approach any microprocessor instruction.

Difference between Processor and Coprocessor

The difference between processor & coprocessor includes the following.

Processor	Coprocessor
The processor is the main processing unit in the computer that executes different arithmetic, logic & control operations based on the instructions.	The coprocessor is a special processor that gives support to the main processor.
The processor takes care of all the main works	The coprocessor takes care of some other things only like graphics & arithmetic calculations.

It handles logical operations & mathematical calculations and generates control signals to other components for synchronizing the tasks.	It performs signal processing, mathematical operations, networking & cryptography based on the type.
The processor maintains the entire computer's proper functioning.	This processor helps in increasing the performance of the system and offloads severe tasks from the CPU.

❖ Advantages

The advantages of a coprocessor include the following.

- The co-processor simply handles more specialized tasks faster as compared to the core CPU
- These processors are easy to use and the most popular.
- It decreases the microprocessor's strain by taking special processing tasks from the CPU so that it runs at a higher speed.
- This processor is helpful in extending the CPU's processing features by expanding the instruction set or by offering configuration registers.

❖ Disadvantages

The disadvantages of coprocessors include the following.

- The coprocessor is not capable in recovering instructions from memory, directly executing instructions, managing memory, I/O operations performing
- It depends on the main processor to regain coprocessor instructions & take care of all other operations not related to the coprocessor.
- This is not the major processor of the system.
- The coprocessor cannot work without the main microprocessor.

❖ Applications

The applications of coprocessors include the following.

- The co-processor is used to perform some of the more specialized tasks such as graphical display processing or complex mathematical calculations.
- A co-processor is simply used for reducing the burden on the CPU of a computer.
- This processor works with the CPU of the computer side-by-side.

- This processor performs high-level mathematical operations much faster as compared to the main processor like roots, logarithms, trigonometry functions, etc.
- A coprocessor increases the primary processor's functions.
- The coprocessor performs different operations like signal processing, floating-point arithmetic, string processing, graphics, I/O interfacing through peripheral devices, cryptography, etc.
- These processors are stand-alone chips in earlier desktop computers that were connected to the motherboard.
- A coprocessor handles the CPU tasks for boosting overall performance.